OMRON

Digital Amplifier Ultrasonic Sensor

E4C-UDA Series

A Reflective Sensor That Handles All Types of Sensing Object Colors and Patterns

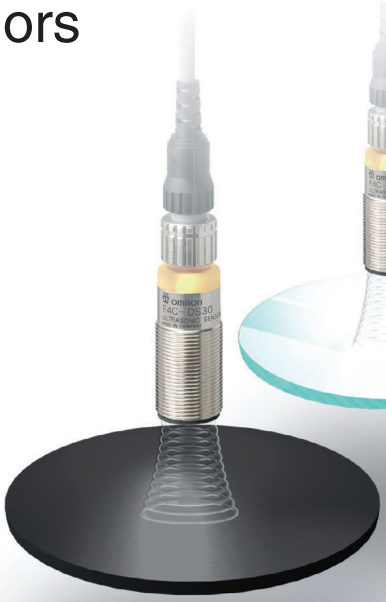

realizing

Sensor Heads

Head Variations

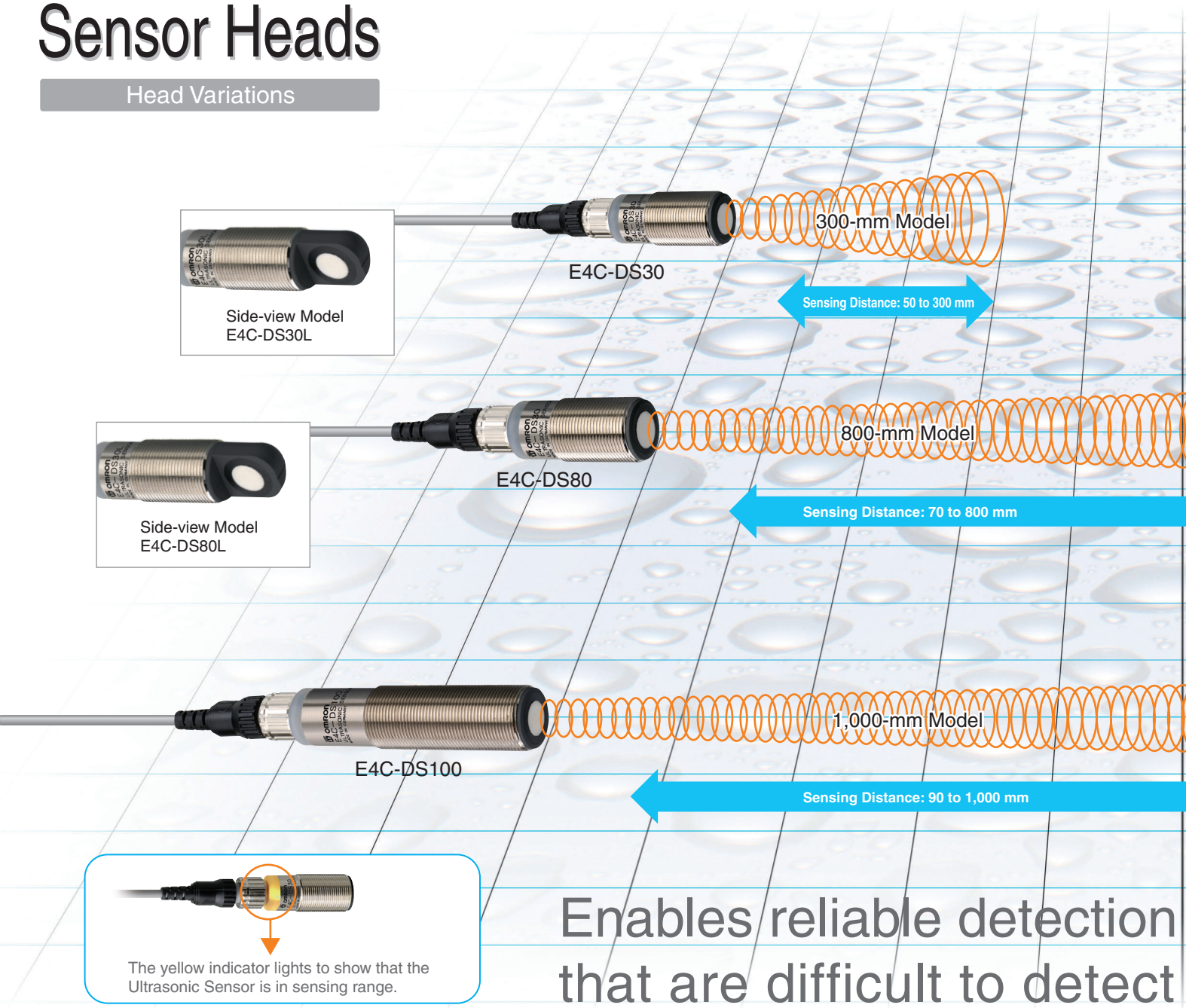

The yellow indicator lights to show that the Ultrasonic Sensor is in sensing range.

Enables reliable detection that are difficult to detect

Compact with a Broad Selection of Side-view Heads

A wide range of Side-view Models are available in an M18 metal body - the smallest in its class.
This is the first multi-detection sensor that handles all types of sensing object.
The Head conforms to IP65, which means it can be used in environments exposed to dust and moisture (Sensor Head only).

Short body | Side view | Long range

Free-cut Cable

The cable between the Sensor Head and amplifier uses clamp connectors that conform to OMRON original E-con specifications, which makes it easy to cut and adjust the cable length.

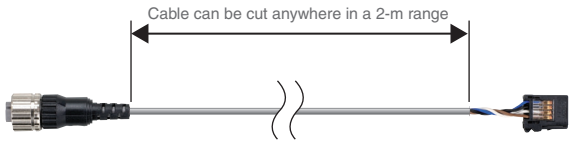

Amplifiers

Amplifier Variations

Range Discrimination with Two Threshold Values

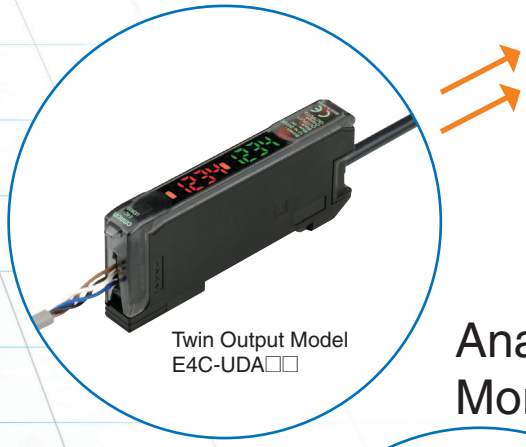

Analog Output for More Applications

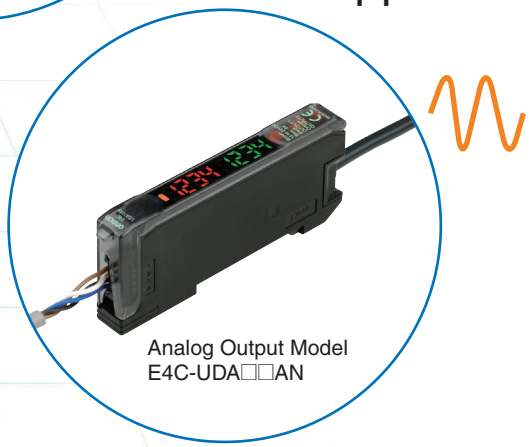

of a great variety of workpieces optically.

Detection Range Features Good Directivity

A great improvement has been made to directivity, which is traditionally a weak point of ultrasonic sensors. The influence of peripheral objects that cause detection errors has been reduced.

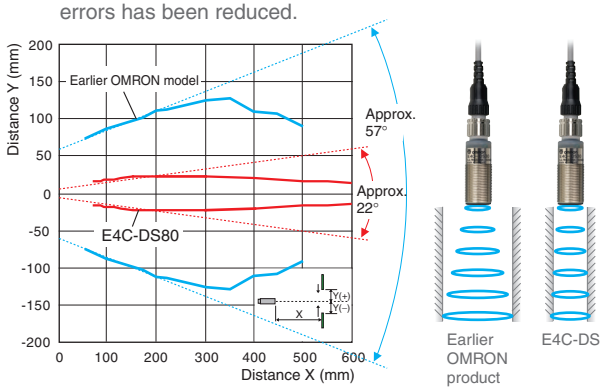

Side-by-side Mounting Possible

There is no mutual interference even with side-by-side mounting.
(E4C-DS30/30L/80/80L)

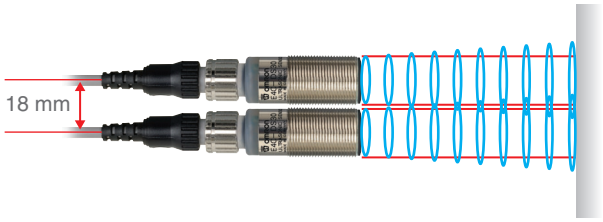

*Mutual interference may occur under some conditions.

Note: The ultrasonic waves shown are an illustration only.

Slim Amplifier with Useful Functions

Multi-function Slim Amplifier

A two-output or one-output (analog output) amplifier can be selected to suit the application.

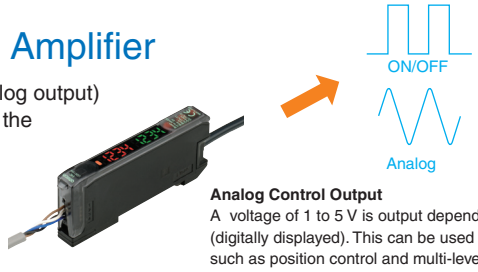

Analog Control Output
A voltage of 1 to 5 V is output depending on the detection volume (digitally displayed). This can be used for a variety of applications, such as position control and multi-level discrimination and detection.

Scaling Function

The zero reset function means that the standard sensor distance display can be easily changed to a workpiece height display.

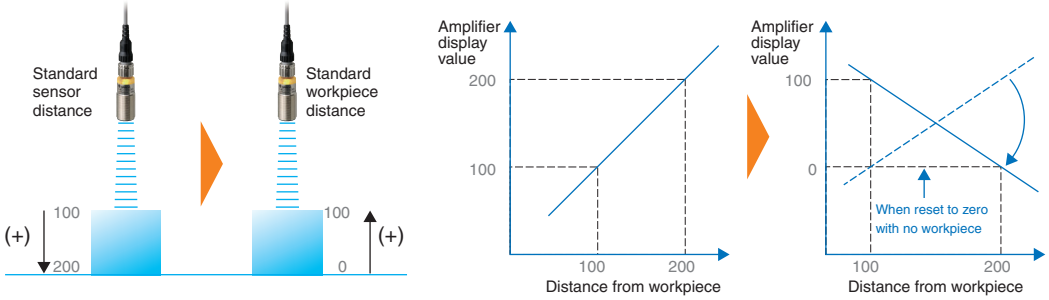

Monitor Focus Function

Analog output allocations can be changed according to the distance range to enable narrowing the range and thus achieve high-precision outputs.

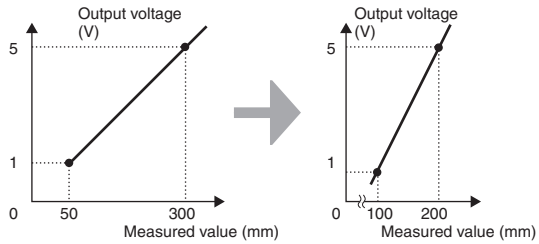

Settings for Threshold Maximum and Minimum

The threshold values can be set directly with position teaching using a workpiece.
Even without a workpiece, the threshold values can be set directly using distance.

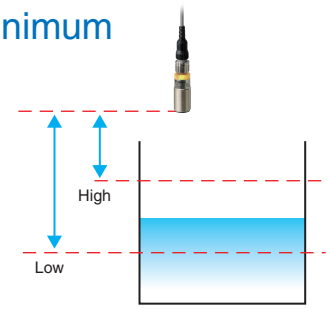

High Stability Not Influenced by Color or Material

Metal, glass, rubber - a wide variety of materials that were difficult to measure without contact can now be measured. Another feature of the E4C-UDA Series is the small error margin in the measurement values.

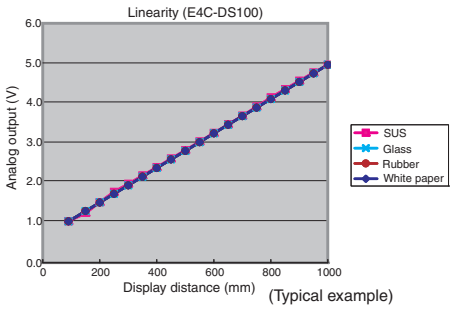

(Typical example)

Easy-to-read Digital Distance Display

Distance Display (mm)

Full size

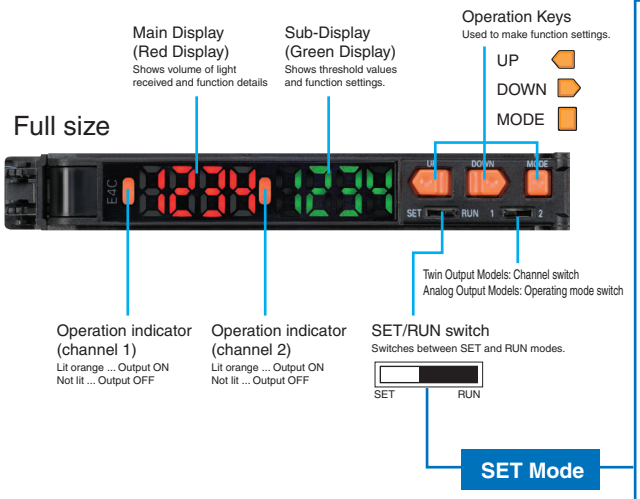

One-touch Teaching to Remove the Effect of the Background

Setting Example

Set the function to 2Pnt (teaching with and without a workpiece). (2PNT is the default setting.) Set the threshold value without a workpiece (i.e., in reference to the background).
Set the threshold value at a distance 10% in front of the sensing range width in reference to the distance without a workpiece.

Example: The threshold is set 25 mm in front of the sensing range for the E4C-DS30 (sensing range: 50 to 300 mm).

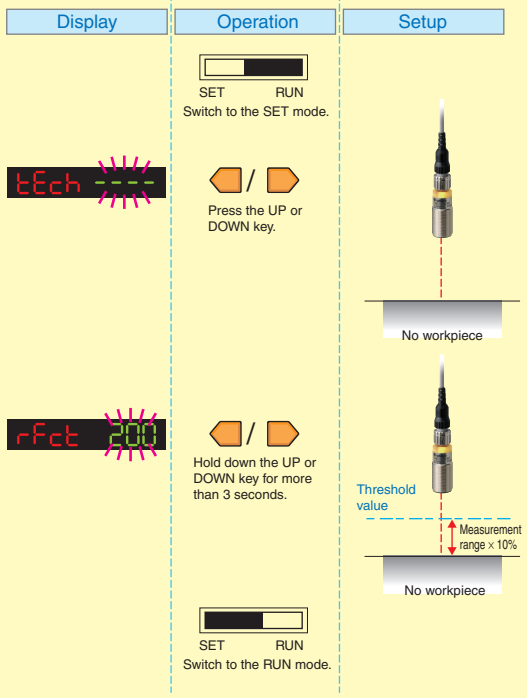

Simple Settings Using Key Operations

Switching to SET Mode

Mode Selection ⇄ **Function Selection**

Mode Selection		Function Selection	
0-oP non	0.Operation mode Note: "0. Operation mode" is not supported for analog outputs.	n-on	Near distance ON
		F-on	Far distance ON
1-Au 8	1. Number of samples to average	1 to 256	
2-tF ----	2. Timer	----	Timer disabled
		oFFd	OFF-delay timer
		on-d	ON-delay timer
		1Sht	One-shot timer
3-dP	3. Display switch	250 130	Current distance and threshold value
		PEAK both	Distance between the nearest workpiece on the Near side and the farthest workpiece on the Far side
		250 PEAK	Current distance and distance at peak
		250 ch	Current distance and channel No.
4-Ad 2Pnt	4. MODE key setting	2Pnt	Teaching with and without a workpiece
		AUto	Automatic-teaching
		PPt	Position teaching
		0rSt	Execute a zero reset
		oFSt	Position teaching
5-bS ----	5. Bank selection	0 to 3	
6-br 0	6. Bank registration	0 to 3	
7-ru d123	7. Display orientation	d123	Normal display
		E2 1P	Reversed display
8-SS ----	8. Sensor model selection	30	E4C-DS30
		80	E4C-DS80
		100	E4C-DS100
9-Sc ----	9. Scaling set	on	Scaling set
		oFF	Scaling not set
For the Twin Output Model			
10ot 2oUt	10. Output method setting	2oUt	Output on each channel
		ArEA	This is output only when there is a workpiece between the two threshold value distances.
		2b It	2BIT output
For the Analog Output Model			
10Ar 2Pnt	10. Output method setting	2Pnt	Range of two preset points is output as 1 to 5 V.
		rFct	Near-distance side rated distance to background setting range is output as 1 to 5 V.
		nFcS	Range of two points preset by direct entry is output as 1 to 5 V.

Variety of Applications

●Detection of Transparent Trays

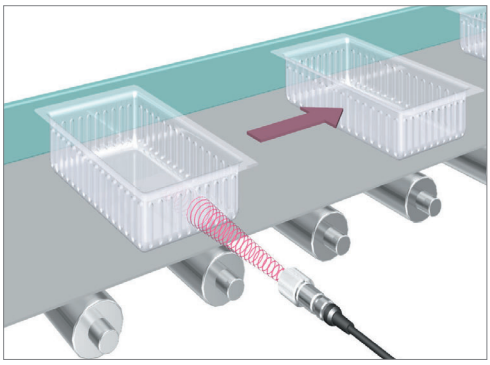

●Inspection of Solvent Tank Levels

●Detection of Sheet Sag

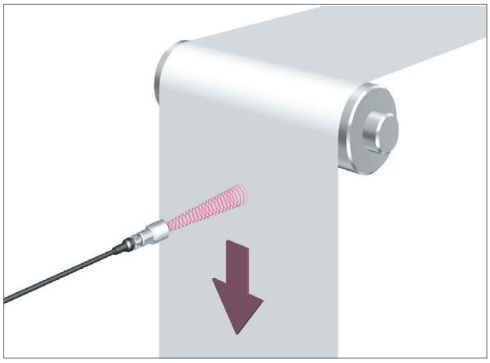

●Detection of Tires

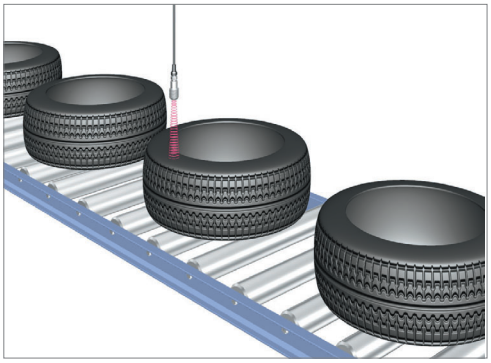

●Control of Rubber Sheet Tension

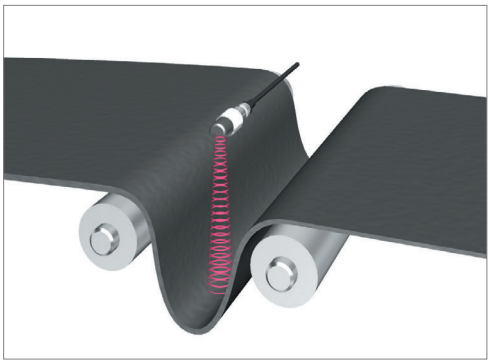

●Detection of Position of Remaining Glass Substrates in Cassettes

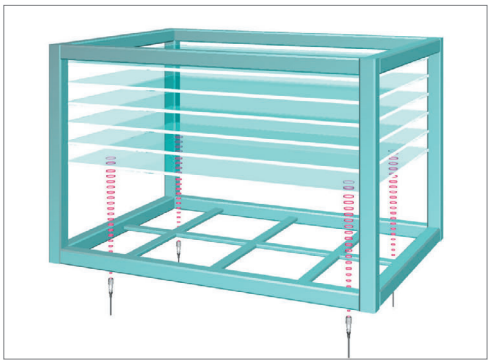

Note: The E4C-UDA Series cannot be used in some circumstances, depending on the conditions.

Ordering Information

Sensors

Sensor Heads

Shape	Model	Measurement range	Model
M18	Straight	50 to 300 mm	E4C-DS30
	Side view		E4C-DS30L
	Straight	70 to 800 mm	E4C-DS80
	Side view		E4C-DS80L
	Straight	90 to 1000 mm	E4C-DS100

Note: Refer to the definition of resolution in the *Ratings and Specifications* tables for information on conditions required to achieve this resolution.

Amplifiers

Shape	Power supply	Output specifications	Model
	DC	NPN output	E4C-UDA11
			E4C-UDA11AN
		PNP output	E4C-UDA41
			E4C-UDA41AN

Ratings and Specifications

Sensor Heads

Item / Model	E4C-DS30	E4C-DS30L	E4C-DS80	E4C-DS80L	E4C-DS100
Measurement range	50 to 300 mm		70 to 800 mm		90 to 1,000 mm
Standard sensing object	100 × 100 mm SUS flat plate				
Near distance dead band	0 to 50 mm		0 to 70 mm		0 to 90 mm
Transmission frequency	Approx. 390 kHz		Approx. 255 kHz		
Response speed	30 ms		100 ms		125 ms
Ambient temperature range	Operating: –25 to 70°C, Storage: –40 to 85°C (with no icing or condensation)				
Ambient humidity range	Operating and storage: 35% to 85% (with no condensation)				
Enclosure rating	IP65				
Indicator	(Yellow) Lit: Sensor within sensing range		(Green) Lit: Sensor within sensing range		
Weight	Approx. 150 g				Approx. 170 g

Amplifiers

Model		Twin Output Models		Analog Output Models	
Model number		E4C-UDA11	E4C-UDA41	E4C-UDA11AN	E4C-UDA41AN
Output configuration		NPN output	PNP output	NPN output	PNP output
Connection method		Pre-wired			
Supply voltage		12 to 24 VDC ± 10%, ripple 10% max.			
Current consumption		80 mA max.			
Control output		NPN open collector (26.4 VDC max.), Load current: 50 mA max., Residual voltage: 1 V max.			
Timer		OFF/OFF-delay/ON-delay/one-shot			
Timer time		1 ms to 5 s			
Analog output	Output form	---		Voltage output (1 to 5 V DC)	
	Connected load	---		10 kΩ min.	
	Temperature characteristics	---		0.3% F.S./°C	
	Resolution	---		2.0% F.S. (See note.)	
	Linearity	---		±2% F.S.	
Ambient temperature range		Operating: –25 to 55°C, Storage: –30 to 70°C (with no icing or condensation)			
Ambient humidity range		Operating and storage: 35% to 85% (with no condensation)			
Insulation resistance		50 MΩ min. (at 500 VDC)			
Dialectic strength		1,000 VAC, 50/60 Hz for 1 min			
Vibration resistance		10 to 150 Hz, 0.75-mm double amplitude, 80 min each in X, Y, and Z directions			
Shock resistance		500 mm/s^2, 3 times each in X, Y and Z directions			
Enclosure rating		IP 50			
Materials		Case: PBT (polybutylene terephthalate), Cover: Polycarbonate			
Weight (packed state)		Approx. 150 g			
Accessories		Instruction Manual			

Note: Value one hour after the product is turned ON. External disturbances, however, sometimes cause minute outputs.

External Dimensions

Sensor Heads (Unit: mm)

E4C-DS30
E4C-DS80

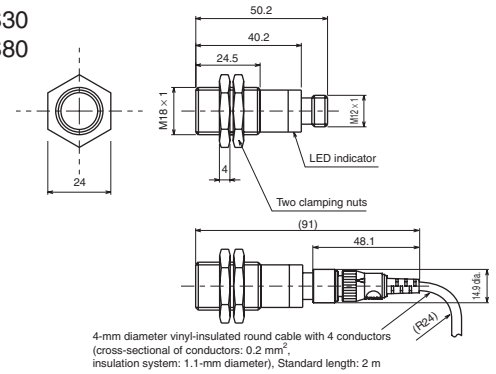

E4C-DS30L
E4C-DS80L

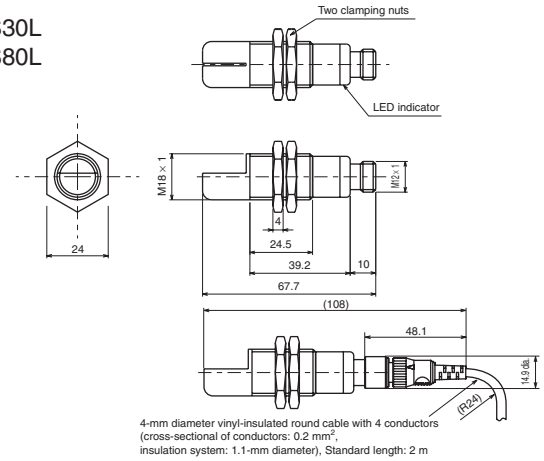

E4C-DS100

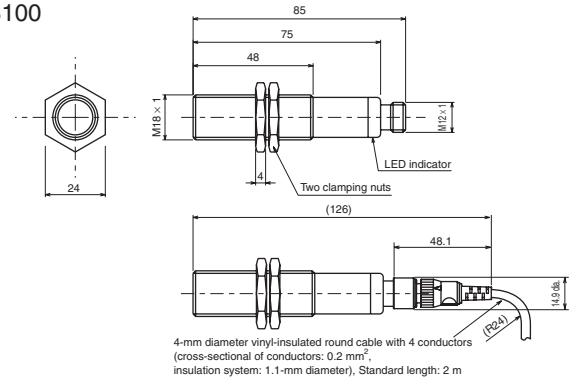

Amplifiers

E4C-UDA11
E4C-UDA41

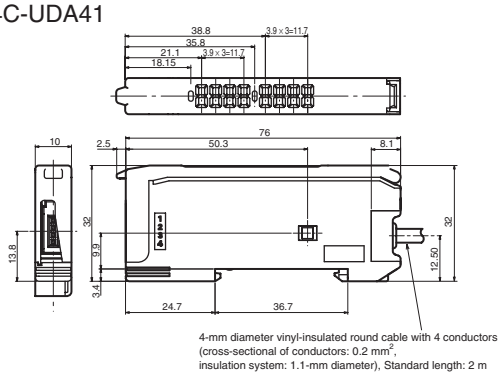

E4C-UDA11AN
E4C-UDA41AN

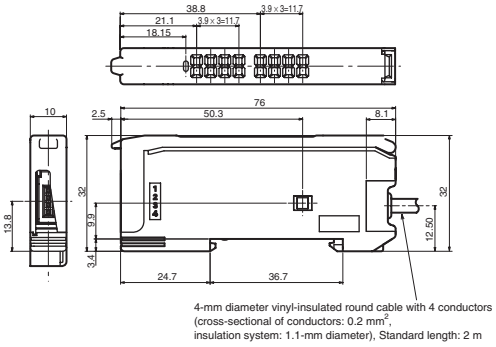

This document provides information mainly for selecting suitable models. Please read the Instruction Sheet carefully for information that the user must understand and accept before purchase, including information on warranty, limitations of liability, and precautions.

Note: Do not use this document to operate the Unit.

OMRON Corporation
Industrial Automation Company
Sensing Devices Division H.Q.
Application Sensors Division
Shiokoji Horikawa, Shimogyo-ku,
Kyoto, 600-8530 Japan
Tel: (81) 75-344-7068/Fax: (81) 75-344-7107

Regional Headquarters
OMRON EUROPE B.V.
Sensor Business Unit
Carl-Benz-Str. 4, D-71154 Nufringen,
Germany
Tel: (49) 7032-811-0/Fax: (49) 7032-811-199

OMRON ELECTRONICS LLC
One Commerce Drive Schaumburg,
IL 60173-5302 U.S.A.
Tel: (1) 847-843-7900/Fax: (1) 847-843-7787

OMRON ASIA PACIFIC PTE. LTD.
No. 438A Alexandra Road # 05-05/08 (Lobby 2),
Alexandra Technopark, Singapore 119967
Tel: (65) 6835-3011/Fax: (65) 6835-2711

OMRON (CHINA) CO., LTD.
Room 2211, Bank of China Tower,
200 Yin Cheng Zhong Road,
PuDong New Area, Shanghai, 200120, China
Tel: (86) 21-5037-2222/Fax: (86) 21-5037-2200

Authorized Distributor:

In the interest of product improvement,
specifications are subject to change without notice.

OMRON Industrial Automation Global: **www.ia.omron.com**

CSM_2_1_0309
Cat. No. F077-E1

Printed in Japan